WaterSaver | ColorTech

CT3100

ANGLE PATTERN LABORATORY WATER VALVE

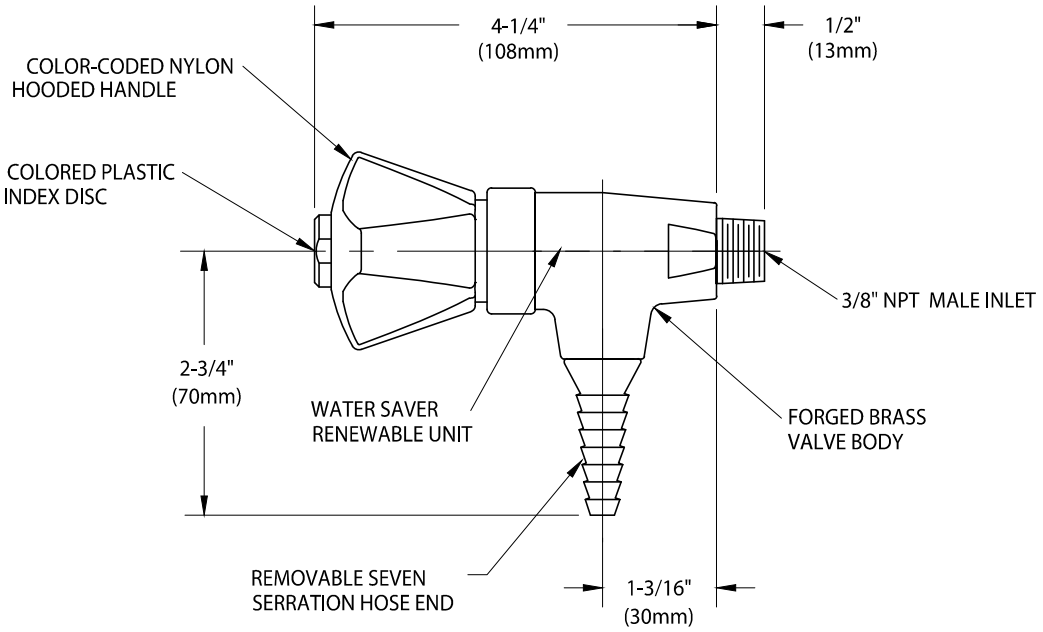

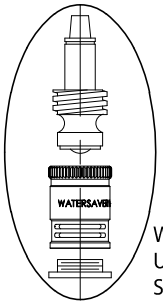

WATER SAVER RENEWABLE
UNIT WITH REPLACEABLE
STAINLESS STEEL SEAT

MEASUREMENTS MAY VARY ±1/4" (6mm).

NOTES:

1. VALVE IS CERTIFIED BY CSA INTERNATIONAL TO COMPLY WITH ASME A112.18.1M AND CSA B125.1.
2. FIXTURE IS FULLY ASSEMBLED AND FACTORY TESTED PRIOR TO SHIPMENT.
3. VALVE HAS COLORTECH EPOXY POWDER COATED FINISH. SPECIFY COLOR (WHITE, GRAY OR TAN) WHEN ORDERING.

WaterSaver Faucet Co.
701 West Erie Street
Chicago, IL 60654

312 666 5500 t
312 666 5501 f
wsflab.com

Drawing Number:

Revised: 011713-TEC