WaterSaver

Laboratory Mixing Faucets

- ☐ **L2211TWI-VB-3001** Laboratory Mixing Faucet, Deck Mounted, 6” Rigid Vacuum Breaker Gooseneck, Foot-Operated Mixing Valve
- ☐ **L2212TWI-VB-3001** Same as above except with Swing Vacuum Breaker Gooseneck
- ☐ **L2214TWI-VB-3001** Same as above except with Rigid/Swing Vacuum Breaker Gooseneck

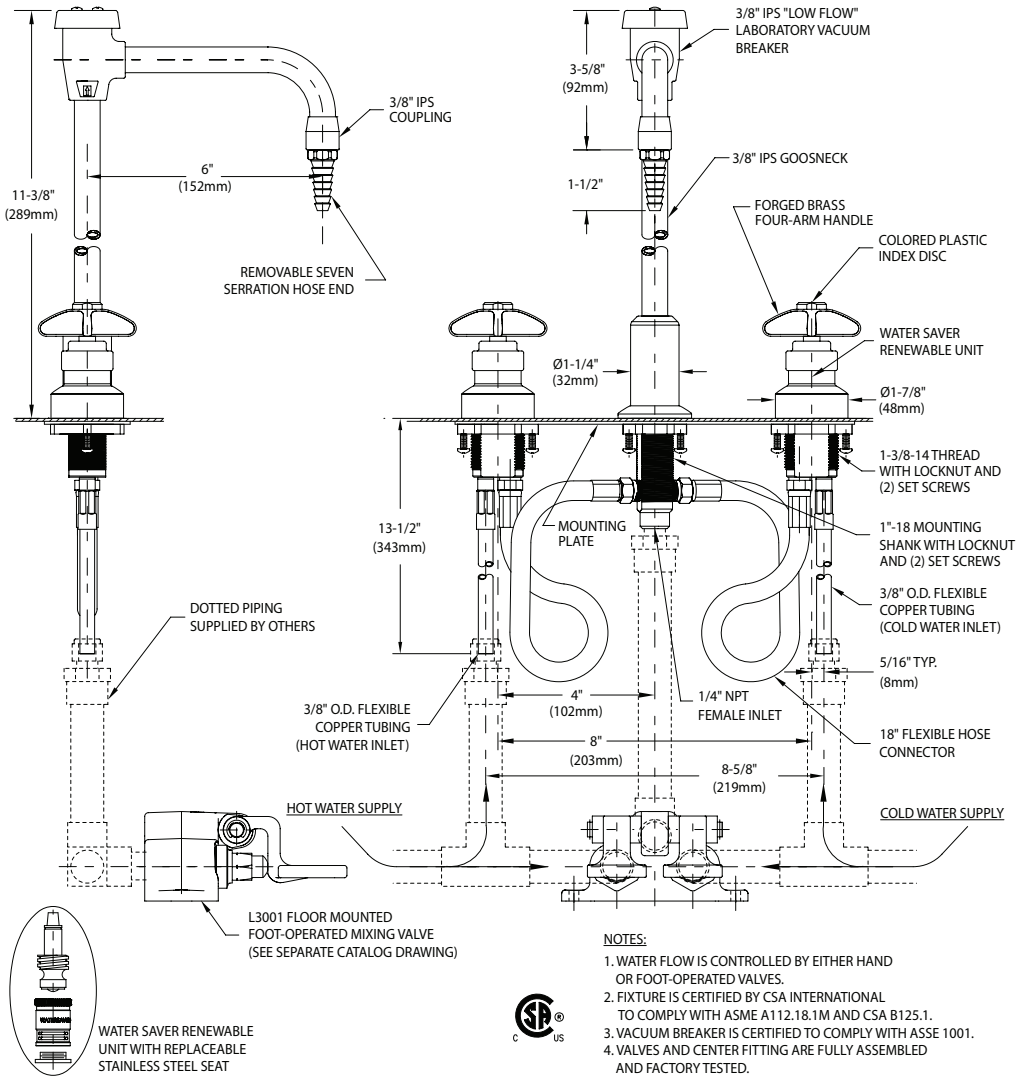

NOTES:

1. WATER FLOW IS CONTROLLED BY EITHER HAND OR FOOT-OPERATED VALVES.
2. FIXTURE IS CERTIFIED BY CSA INTERNATIONAL TO COMPLY WITH ASME A112.18.1M AND CSA B125.1.
3. VACUUM BREAKER IS CERTIFIED TO COMPLY WITH ASSE 1001.
4. VALVES AND CENTER FITTING ARE FULLY ASSEMBLED AND FACTORY TESTED.
5. PROVIDE (2) Ø1-3/8” DIAMETER HOLES FOR VALVES AND (1) Ø1-1/32” HOLE FOR CENTER FITTING.

THIS SPACE FOR ARCHITECT/ENGINEER APPROVAL

Due to continuing product improvement, the information contained in this document is subject to change without notice. All dimensions are ± 1/4" (6mm). Rev. 122619

WaterSaver Faucet Co.
701 W Erie St
Chicago, IL 60654

312 666 5500 TELEPHONE
312 666 5501 FACSIMILE
wsflab.com